TECHNICAL SPECIFICATION

HIGH SPEED BAR MACHINING CENTER FOR LARGE SECTIONS

MGP 300

(As per drawing 47836IMP000001_A)

Prepared for CUSTOMER

Address 1
Address 2
ZIP CODE, CITY
COUNTRY

List of contents

1 INTRODUCTION 4

2 INTELLECTUAL PROPERTY- PROHIBITED REPRODUCTION AND USE 4

3 DESCRIPTION OF THE MGP 300 5

3.1 DEFINITION & FUNCTION OF THE AXES 5
3.2 DEFINITION OF USABLE EXTRUSIONS 5
3.3 DESCRIPTION OF THE EXTRUSION POSITIONING AND FEED UNIT 6
3.3.1 Principle 6
3.3.2 Operation 6
3.3.3 Extrusion holding principle 7

4 MAIN PARAMETERS 8

4.1 WORKING AXES - TECHNICAL DATA 8
4.1.1 Machining axes 8
4.1.2 Bar clamping 9
4.2 DIMENSIONS & WEIGHT 9
4.3 ACCURACY 10
4.4 WORKING CONDITIONS 10

5 MGP300 MACHINE DESCRIPTION 11

5.1 SPECIAL MACHINE STRUCTURE FOR HIGH SPEED MILLING 11
5.2 WORKING AXES KINEMATICS 11
5.2.1 Drives 11
5.2.2 Guideways 11
5.2.3 Protection 12
5.2.4 Position feedback 12
5.2.5 Lubrication 12
5.3 HF SPINDLE 13
5.3.1 Main characteristics 13
5.3.2 Power / Torque diagram 13
5.3.3 Spindle temperature compensation 14
5.4 CNC CONTROL AND OPERATOR STATION 15
5.4.1 CNC Configuration 15
5.4.2 Operator station 16
5.4.3 Assistance and maintenance interfaces 16
5.4.4 Software developments 17

6 EQUIPMENT 18

6.1 HEIGHT-CONTROLLED SIDE SUPPORTS (MOTORIZED TUNNELS) 18
6.2 CHIPS CONVEYING SYSTEM 19
6.3 COOLANT UNIT 19
6.4 THERMAL COMPENSATION 19
6.5 ATC - TOOL MAGAZINE (50 TOOLS) 20
6.6 BROKEN TOOL AND TOOL LENGTH PROBE – BLUM LASER MICRO SINGLE NT 20
6.7 PART PROBING SYSTEM AND FUNCTIONS 21
6.8 POST-PROCESSOR 21
6.9 CAD SOLID MODEL FOR SIMULATION SOFTWARE 21
6.10 ONE SET OF STANDARD JAWS 22
6.11 SPECIAL TOOLS FOR MAINTENANCE 22

7 SAFETY AND PROTECTION 23

7.1 SUPPLY CONFORMITY ASSURANCE 23
7.2 PROTECTION OF THE WORKING AREA (OPERATOR AND GENERAL PROTECTION) 23
7.3 NOISE LEVEL AT OPERATOR STATION 23

7.4 PROTECTION OF THE EQUIPMENT 23
7.5 TROUBLESHOOTING 23

8 ELECTRIC, HYDRAULIC, PNEUMATIC EQUIPMENTS & PAINTING 24

9 PRE-ACCEPTANCE & TRAINING IN SELLER'S FACTORY 26

9.1 PRE-ACCEPTANCE SCHEDULE & CHARGES 26
9.2 PRE-ACCEPTANCE PERFORMANCE 26
9.3 TRAINING FOR OPERATOR AND MAINTENANCE (ONE WEEK) 27

10 INSTALLATION, COMMISSIONING, TRAINING & FINAL ACCEPTANCE ON BUYER'S SITE 28

10.1 CONDITIONS FOR INSTALLATION AT THE BUYER'S WORKSHOP 28
10.2 FOUNDATIONS & CIVIL WORKS 28
10.3 INSTALLATION AND COMMISSIONING 28
10.4 FINAL ACCEPTANCE AT BUYER'S FACILITY 29
10.4.1 Schedule 29
10.4.2 Standard Final acceptance performance 29
10.5 ASSISTANCE TO START PRODUCTION (1 X 8 WEEKS) 29

11 DOCUMENTATION 31

12 WARRANTY 32

12.1 WARRANTY 32
12.2 REMOTE DIAGNOSIS (EWON) 33

Foreword

All pictures, sketches, CAD 3D views are for illustration purpose only and are not contractual.

Should this offer be translated in another language, please note that in case of discrepancies, the original English version of this document prevails.

Software interfaces are in English, except for some of them that will also be delivered in another language (a specific note will mention it in that case).

1 INTRODUCTION

The **MGP 300 machining center** enables to get finished parts from aluminum bar extrusions where the following operations can be obtained:

- Drilling, spot facing, chamfering
- Milling
- Routing
- End machining

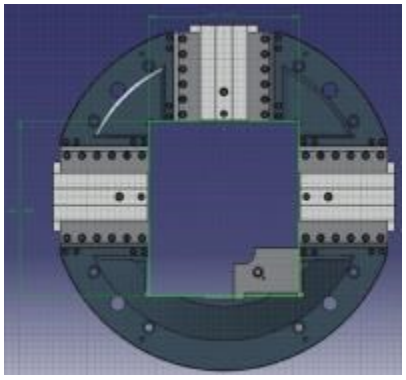

The MGP300 is very cost-effective even for small quantities of parts. The MGP300 can machine parts up to 10 meters.

Depending on the shape of the cross bars, it is possible to machine part with length superior to 10m. Feasibility shall be confirmed by Fives Machining according to part drawing.

The standard fixture or base plate incorporates easily changeable clamping devices that allow the clamping of most profile sections.

The **MGP300** allows a very powerful machining process called “PUSH PULL machining” (patented by FIVES).

The movement of the bar is accomplished by the outside or extreme chucks on long strokes, allowing the center chucks to guide the bar in the working area near the spindle.

The support provided by the central chucks allows a sliding clamping of the extrusion to provide the utmost in rigidity during the cutting process.

2 INTELLECTUAL PROPERTY- PROHIBITED REPRODUCTION AND USE

This proposal and the submitted documents are protected by the French laws and the international conventions on industrial property, copyright and unfair competition:

- Civil code : articles 1382 and 1383,
- Intellectual property Code: article L111-1 and following.
- Paris Convention (1967), Bern Convention (1971) and WTO Agreement (15/04/1994).

We are and remain the owners of all the intellectual property rights and of the know-how associated with the tender, irrespective of the fact that this know-how has been developed specifically for this tender or not, as well as of all the technical documents given to the customer or prospect, i.e. plans, drawings, proposals, etc.

When receiving the proposal, plans and technical documents, the customer or prospect undertakes not to use them in any way whatsoever, not to copy nor reproduce them, except where required by the contract that may follow, and not to disclose them to third parties whoever they may be and for whatever reason it may be.

The customer or prospect undertakes to observe strict confidentiality for all the information made known.

3 DESCRIPTION OF THE MGP 300

3.1 Definition & function of the axes

Movement of the chucks, milling saddle/head

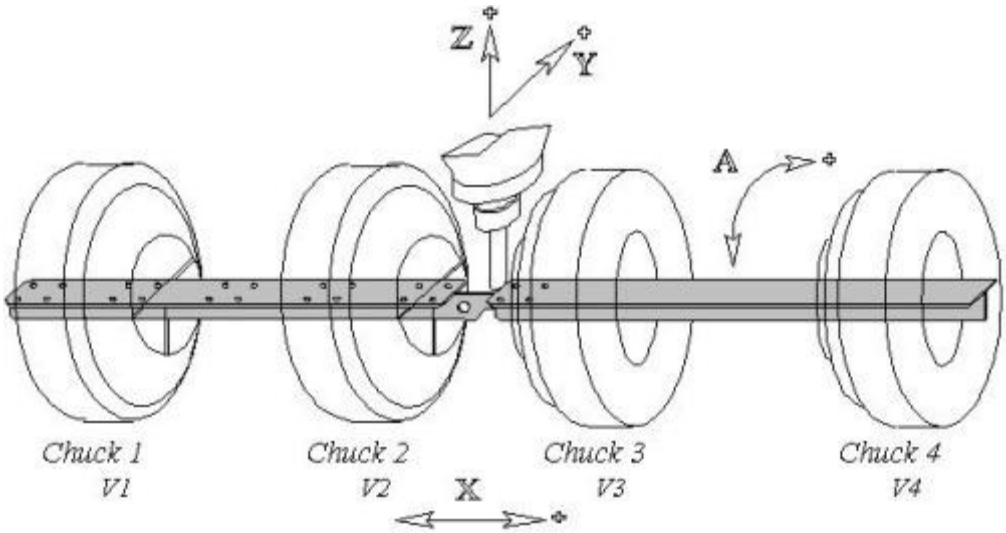

Axis	Description	Function
X	Programmed **virtual** axis	Longitudinal travel of the part
Y	Cross travel of milling saddle	Movements used to position the spindle
Z	Vertical travel of milling head	
V1 to V4	Longitudinal travel of chucks generating X axis movement of part. V1 to V4 are automatically managed by internal subprograms of the CNC	**V2-V3:** Movements used to ensure part rigidity during machining **V1-V4:** Movements used to feed the bar during machining
A	Synchronized rotation of the 4 chucking devices. (4 motors + 4 encoders synchronized by N.C.)	Chuck rotation for positioning of extrusion

3.2 Definition of usable extrusions

Item	Value
Max length	Standard version : 10m
Max height	235 mm
Max width	235 mm

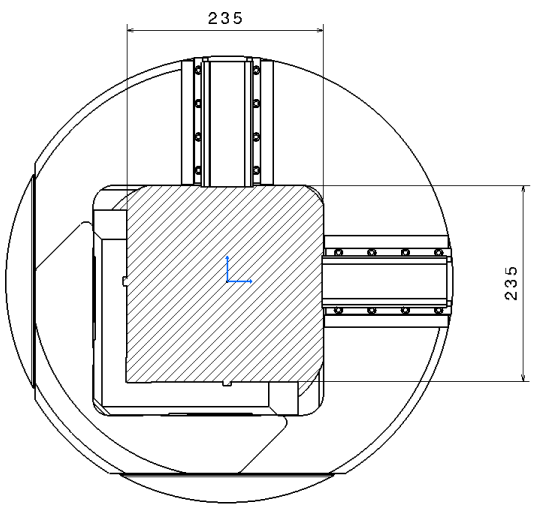

3.3 Description of the extrusion positioning and feed unit

3.3.1 Principle

4 electronically synchronized rotating chucks hold the extrusion for machining.

To ensure optimum rigidity during the machining process the MGP 300 positions the N° 2 and 3 as close as possible to the machining zone.

Chucks N° 1 and 4 control extrusion travel.

Advantages of the system

When the extrusion is inserted in the chucks, the extrusion receives 4 support points, which provides a high rigidity on long extrusions.

During machining of long parts, the machining linear (X) reference is maintained by the support of the outside most chucks N° 1 & 4 (push - pull axis).

The distance between chuck n°2 and n°3 in the working area can be adjusted in order to take into account the current type of section as well as the stresses generated during the machining process.

A Laser type photocell on chucks N°1 and N°4 enables checking of bar presence.

3.3.2 Operation

The loading of the extrusions in the machine can be done from the right or the left side, the machine being configured accordingly during startup phase in the seller's factory. If loading side needs to be changed later on, a machine reconfiguration will be needed.

When loading from the right side, the operator inserts the extrusion first through the N° 4 chuck and then through the N° 3 chuck.

After loading the part into N° 3 and N°4 chucks the MGP 300 establishes the X axis reference set-up by means of an automatic machining cycle.

The forward and backward bar movement is completely automatic.

The NC control manages the routines of travel of chucks 1 to 4 taking into account the available length of bar thus generating a continuous movement of the part programmed as one single X-axis.

3.3.3 *Extrusion holding principle*

The fixed jaws act as a reference for the extrusion

The mobile jaws ensure clamping of the extrusion.

The fixed jaw block is positioned on the base plate with a rigid reference.

The mobile jaws are adjustable in position on their sliders.

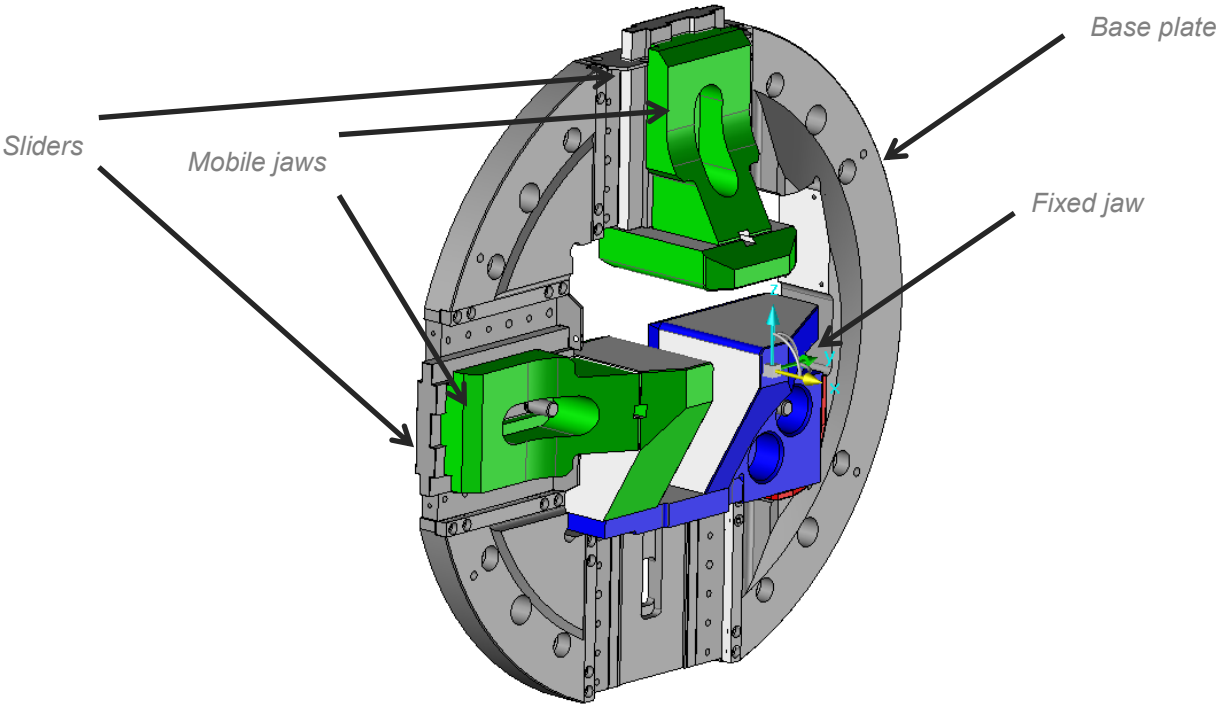

Example of jaws

4 MAIN PARAMETERS

4.1 Working axes - Technical data

4.1.1 Machining axes

AXIS	STROKE	RAPID FEEDRATE	ACCELERATION
V2-V3 (machining area)	790 mm	Up to 60 m/min.	10 m/s²
V1-V4 (Push pull chucks)	3 040 mm	Up to 60 m/min.	10 m/s²
Y-Axis (cross)	400 mm	60 m/min.	10 m/s²
Z-Axis (Vertical)	350 mm	30 m/min	6 m/s²
A2-A3 (machining area)	± 200° (total 400°)	20 rpm	720 °/s²
A1-A4 (Push pull chucks)	± 200° (total 400°)	20 rpm	720 °/s²

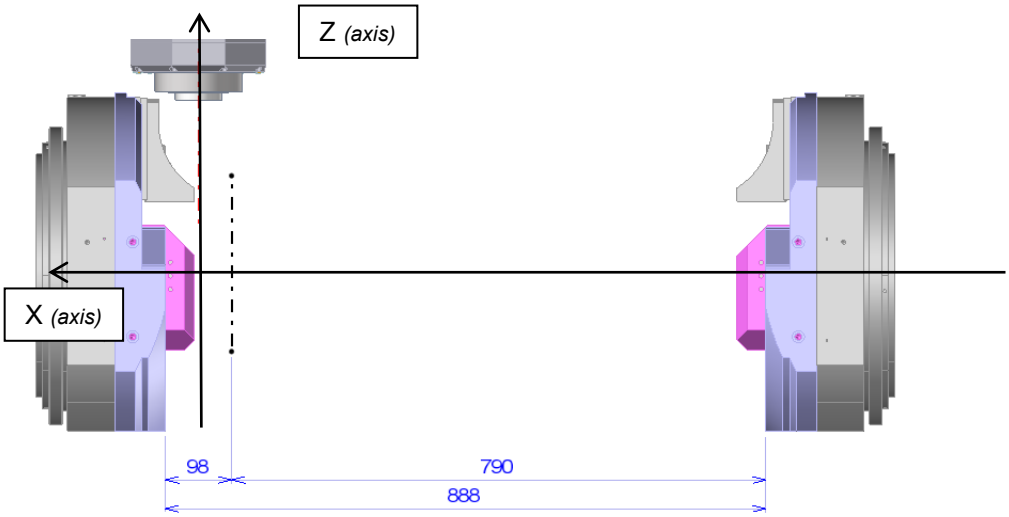

Min. distance between plates references for chuck V2 or V3	98 mm
Max distance between plates references for chuck V2 or V3	888mm
Min distance between spindle's face and chucks' axes (D5)	75 mm

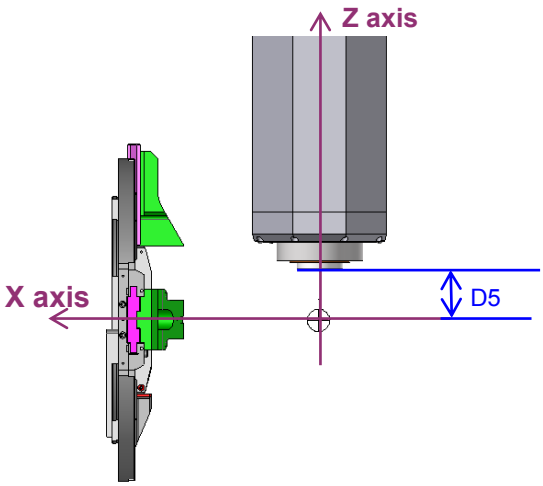

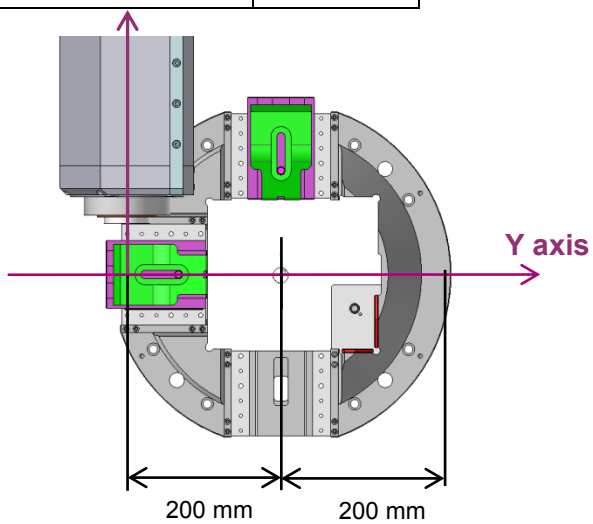

4.1.2 Bar clamping

**** Chucks 2 - 3 (working area)***

The N°2 & N°3 chucks allow clamping the part for machining operations such as part cuttings.

The N°2 & N°3 chucks also act as a pressure pad to allow push-pull machining (FIVES patent) when used in concert with the movement by the N°1 & N°4 chucks.

The use of the four chucks insures constant control of the extrusion with a high degree of flexibility.

The flexibility provided by the MGP clamping system provides the optimum support and clamping action to ensure a vibration free machining even on difficult extrusions to machine such as the H and Z shape.

The clamping of the jaws is made thanks to hydraulic actuators, driven by the part program.

Each actuator is piloted with individual pressure setpoint.

Number of jaws per chuck	3 (1 fixed, 2 moving)
Fully programmable jaw control device	Hydraulic
Clamping strength of each jaw	Fully Adjustable from 20 to 1000 daN by part program parameters
Jaw travel	22 mm

**** Chucks 1 - 4 (Push-pull)***

Number of jaws per chuck	3 (1 fixed, 2 moving)
Fully programmable jaw control device	Hydraulic
Clamping strength of each jaw	Fully adjustable from 20 to 1000 daN by part program parameters
Jaw travel	22 mm

4.2 Dimensions & weight

Dimensions of the machine		
	Length	Approx. 10 000 mm (without tunnels)
	Width	Approx. 5 000 mm
	Height	Approx. 2 900 mm
Total weight of the machine:		Approx. 25,000 kg (without tunnels)

4.3 Accuracy

According to ISO 230-2 standard and conditions specified in acceptance report

AXIS	ACCURACY	REPEATABILITY
V2-V3	0.020 mm / 790 mm	0.01 mm
V1-V4	0.020 mm / 3000mm	0.01 mm
Y-Axis (cross)	0.020 mm / 400 mm	0.01 mm
Z-Axis (Vertical)	0.020 mm / 350 mm	0.01 mm
A2-A3	30 arc seconds	15 arc seconds
A1-A4	2 arc minutes	1 arc minute

4.4 Working conditions

Environment	Characteristics
Temperature range	from 5 to 40°C (optimal 17-28°C)
Hygrometry	Not exceeding 75%
Vibrations	Up to 0.25 mm/s
Atmosphere contamination	Low density of dust, cutting oil, organic solvents…
ENVIRONMENTAL CONDITIONS FOR ACCURACY ACCEPTANCE	
Temperature range	from 17 to 25°C
Temperature variations according to vertical level above floor	1°C / m
Max variation of the. Temperature over time	1°C / h
Other requirements	Machine anchored on its foundations No direct sun / no draught

5 MGP300 MACHINE DESCRIPTION

5.1 Special machine structure for high speed milling

The machine base is composed of a single steel weldment.

This base rests on a flat foundation and has provision for aligning the machine tool to the proper geometry settings. The extremely stiff welding structure acts as bench for supporting the ever changing center of gravity of the general overall.

Bed, fixed gantry, saddles (Y, V1, V2, V3, and V4) and chucks body (A) are made from a fully stress relieved steel weldment.

5.2 Working axes kinematics

5.2.1 Drives

AXIS	DRIVES	MOTOR POWER (kW) Nominal value	MOTOR TORQUE (Nm) / THRUST (N)
V2-V3 V1-V4	SIEMENS Linear motors (1FN3).	3.0 kW	3915 N
Y-Axis (cross)	SIEMENS Linear motor (1FN3).	2.25 kW	2895 N
Z-Axis (Vertical)	SIEMENS servomotor (1FK7) Transmission through reducer and ball screw with ground thread and preloaded nut	2.4 kW	7.6 Nm
A2-A3	Rotary direct drive by ring torque motor (ETEL).	4.5 kW	514 Nm
A1-A4	SIEMENS servomotor (1FK7) Transmission through low-backlash reducer and gear & pinion	1.7 kW	5.4 Nm

5.2.2 Guideways

The guideways of the linear axes X, Y and Z are composed of loaded roller bearings, which travel along monobloc steel guideways.

X-axis guideways size 35 with 2 x 4 sliding blocks

Y-axis guideways size 35 with 2 x 4 sliding blocks

Z-axis guideways size 25 with 4 sliding blocks

They reduce the coefficient of friction and ensure an optimum linear positioning.

The rotary axes A are guided by combined roller bearings.

5.2.3 *Protection*

The roller bearings for the longitudinal (in milling area between chuck 2 and 3), transversal and vertical movements are protected by very efficient built-in wipers.

Fully enclosed fabric and rubber composite covers allow freedom of movement while protecting the rear Y-axis.

5.2.4 *Position feedback*

Three linear scales allow precision measuring of linear axes V1 to V4, Y and Z (HEIDENHAIN)

Scales are pressurized and are located under guards in milling area.

Two ring glass scales allow precision measuring of rotary axes A2 and A3. (HEIDENHAIN)

AXIS	MEASURE TYPE	MEASURE RESOLUTION	AXIS RESOLUTION
V2-V3	Incremental linear scale	40 µm	1 µm
V1-V4	Incremental linear scale	40 µm	1 µm
Y-Axis	Absolute linear scale	20 µm	0.5 µm
Z-Axis	Absolute linear scale	20 µm	0.5 µm
A2-A3	Incremental rotary scale	38000 per/rev	0.0002°
A1-A4	Multiturn absolute motor encoder	2048 per/rev	0.00006°

5.2.5 *Lubrication*

All ways are automatically grease lubricated, which helps keeping machine and part clean.

A centralized device through automatic and controlled cycle (clock-operated pump with a tank) lubricates guideways, roller pre-loaded bearings and ball screws.

Chucks rotary kinematics (gears & bearings) are lifelong lubricated by oil or grease.

5.3 HF spindle

5.3.1 Main characteristics

HF- Spindle	Characteristics
Spindle type	GMN
Nominal power	40 kW *(S1, 100%)*, 53 kW *(S6, 40%)*
Spindle speed	0 to 24 000 rpm
Nominal torque	56 Nm *(S1, 100%)*, 72 Nm *(S6, 40%)*
Taper	HSK A63
Tool clamping	Automatic
Lubrication	Air/oil lubrication of the spindle bearings
Cooling	Stabilization of the spindle motor temperature by cooled water circulation
Balancing quality level	G2.5 (ISO 1940/01/05/75)
Pre-heating cycle	Automatic – cycle time less than 10 minutes
Miscellaneous	Dust and rust protection (IP55) Taper air blow-out Front sealing Spindle speed monitoring

5.3.2 Power / Torque diagram

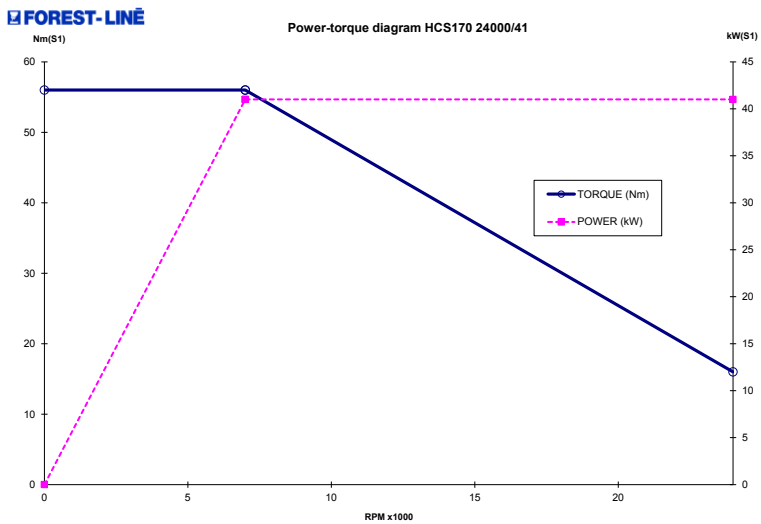

5.3.3 Spindle temperature compensation

The “design for production” philosophy of the HF-spindle includes several safe guards such as temperature sensors that not only protect the operation of the spindle but also use thermo compensation to eliminate inaccuracy as a result of thermal growth during the machining process.

5.4 CNC Control and operator station

5.4.1 CNC Configuration

Numerical Control	**SIEMENS 840D PL (Power Line)**
NCU type	**NCU 573.5B** Software version V 5.1 NC user's memory: 3 Mb
Controllers	**SIMODRIVE 611D**
PLC	Integrated **PLC 317-2DP** SIMATIC with STEP7 language
PCU (computer)	**PCU 50.3B-C** Cel M370 , 1.56 GHz 512 MB DDR2 OS Windows XP Pro
	HD 40Go
	IO ports: 2 x Ethernet 10/100/1000 Mbits/s (RJ45) 4 x USB 1 x COM1 (RS 232 C)
HMI	**SINUMERIK HMI advanced** 6 languages: DE, EN, FR, SP, IT, CS With all basic functions: • Liftfast 6FC51-0AA00-0AA0 • Acceleration feed forward 6FC5250-0AA07-0AA0 • Synchronous actions 2 6FC5251-0AD05-0AA0 • Synchronous actions 6FC5251-0AD04-0AA0 • Temperature compensation 6FC5251-0AA13-0AA0 • Multi axes interpolation 6FC5251-0AC11-0AA0 • Look ahead 6FC5250-0AA06-0AA0

5.4.2 *Operator station*

Operator station	Characteristics
Location	Connected to the machine with an arm, in front side of the working area
Layout	The swivelling unit contains all controls needed by the operator.
Operator's panel	12 inches color display Type OP12 Emergency stop Keyboard MCP483C
Handheld unit 	Connected to the machine, a handheld pendant unit allows for clamping or unclamping the chucks. It includes also one emergency stop button for safety.

5.4.3 *Assistance and maintenance interfaces*

Those dedicated interfaces are developed by FIVES-MACHINING. They display machine information on CNC special pages:

OHM (Operator Help Manager) :

- Specific functions
- Test part
- Adjustment of jaws

MHM (Maintenance Help Manager) :

- Axes' settings
- Axes references
- Tool changer adjustment, spindle startup, measurement calibration, etc.

Human Machine Interface :

- General information about the machine: display of grafcet sequence, jaws pressure, temperatures on the machine and options' status
- Tool : tool information, manual control of ATC movements, tool list display
- PLC input/output status

Those interfaces complement the available data on the CNC.

5.4.4 Software developments

Fives machining has developed enhanced macros for the milling process.

These macros enable elementary movements of the bars, the anti-collision and an easy automatic milling process :

- Start/ end part program

- "Load profile" : the operator loads the part into the machine in a specific position. Then by calling this function in the part program it allows the set-up of the machine and the part in order to start the machining.
- "Fini" : Stop coolant, place Y and Z axis in a safe position and locate the part for unloading

- Specific working modes :

- "Slide window" used to sliding clamp the bar with low pressure on V2 and V3, in push-pull continuous machining mode.
- "Lock window" used to tightly clamp the bar on V2 and V3 for accuracy operations.
- "Mixed window" one of the central chuck is locked the other is sliding clamped. This mode is used for milling thin bar.
- "Auto window" allow automatically "lock window" for drilling.
- "Reverse" used to change the part reference.

- Other useful functions for example

- "count" and "part end cut" used for milling several part in one raw profile
- "Offset X"

6 Equipment

6.1 Height-controlled side supports (Motorized tunnels)

For long, heavy, breakable or fragile parts, the best way to preserve the part integrity and a soft linear movement during machining is to support it in a flat position lined up with the jaw support level.

A NC controlled motor is able to pilot the Z position of the support all along the machining operations and rotations, in relation to the part program pilot routines.

The tunnels are half circular (closed manually by the operator after loading for safety).

They support the workpiece off the machine itself (starting at 4.5 m away from the spindle axis).

They are programmable in height by the NC machine to facilitate the loading of bars in the machine part and adapt to their position (in height) during machining

Parts can be loaded manually by one or 2 operators (if parts are heavy) or with the help of a handling device.

The handling device can be either the workshop crane or a local lifting aid.

The operator then closes the protection tunnels and the sliding doors, and then can start the machining cycle.

Unloading the finished parts is done in the same manner: once the machining cycle is finished, the operator opens the protection tunnels and the sliding doors and unloads the finished part (by hand or with the help of a handling device).

The length of these height-controlled side supports (motorized tunnels) is 7.5 m.

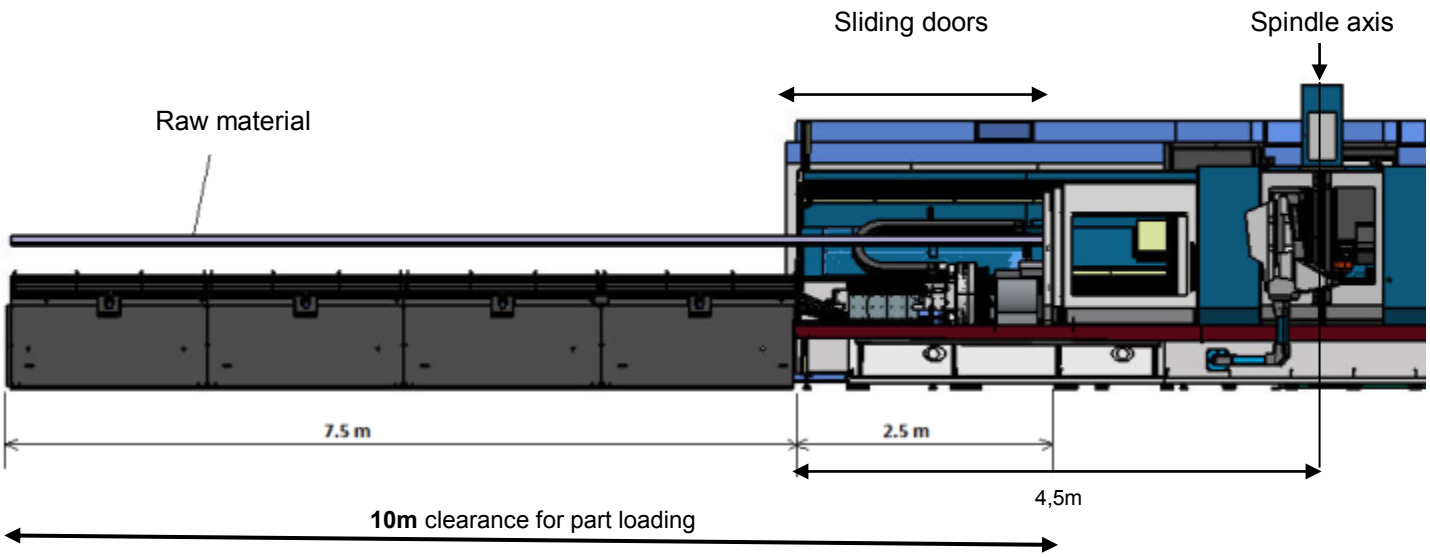

6.2 Chips conveying system

A chip conveyor enables to collect the chips.

It is equipped with a gooseneck, which discharges the chips in a recovery tank supplied by the customer. A grooved grid ensures the prefiltration of the cutting fluids (0.8mm).

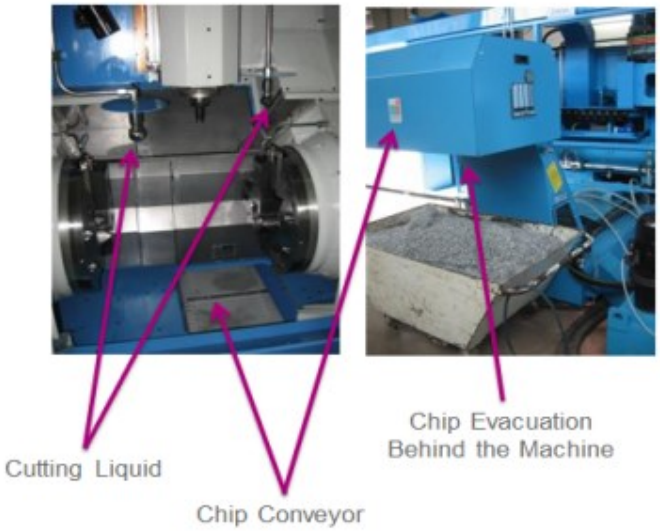

6.3 Coolant unit

An autonomous coolant system (80l/min flow) ensures tool lubrication in working area.
A second coolant system (80l/min flow) ensures the washing of the machine.
A third high-pressure pump supplies coolant in the spindle shaft.
The 1000-l coolant tank is located at the rear of the machine central body.

6.4 Thermal compensation

This function allows to compensate thermal dilation of the part.

It includes :

- 1 temperature sensor on the machine structure
- 1 temperature sensor on the coolant liquid
- The macros allowing to compensate part dilation in real time

6.5 ATC - Tool Magazine (50 Tools)

This is a chain type ATC.

A transfer grip with 2 locations enables to prepare the next tool.

Tool taper	HSK A63
Number of positions	50
Max. tool diameter with 1 tool per location	90 mm
Max. tool diameter with adjacent locations empty	160 mm
Max. tool length	210 mm
Max. weight	4 kg
Tool change time (tool to tool)	< 8 sec. for tool ∅ < 63 mm

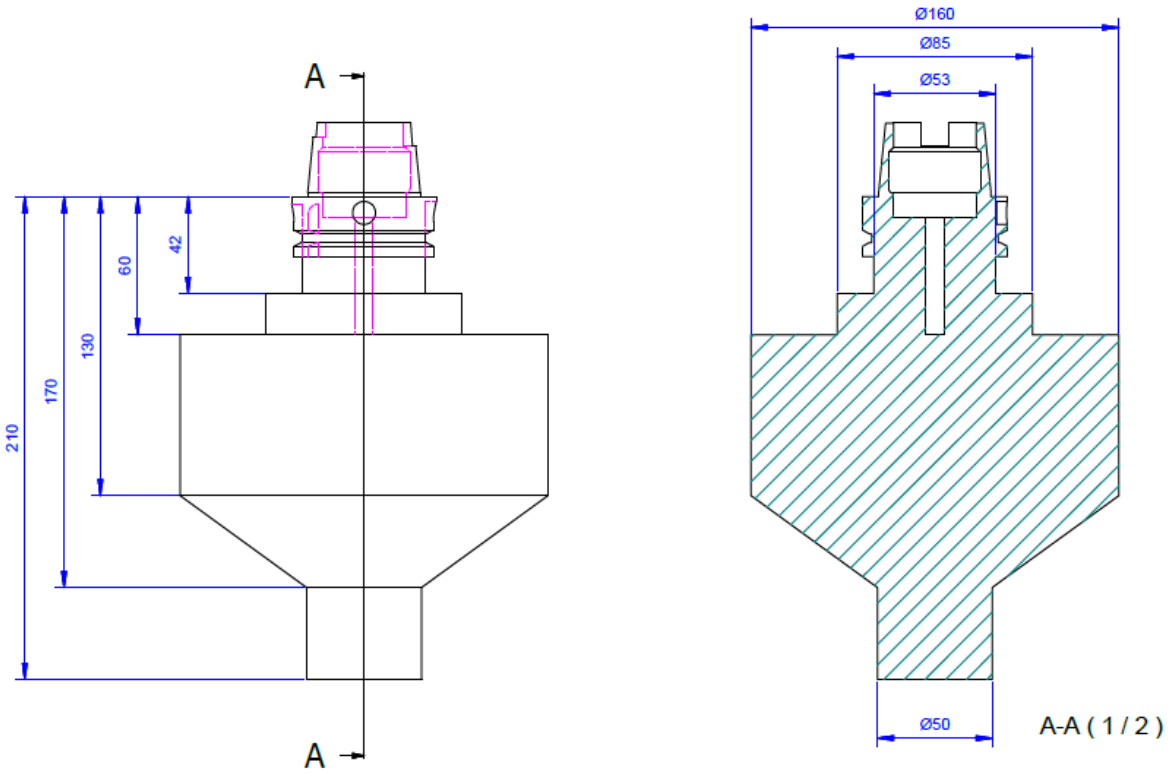

Max. characteristics of the tools that can be loaded in the ATC and measured with the tool probe

6.6 Broken tool and tool length probe – BLUM Laser Micro single NT

A Laser tool detection system is mounted in the back of the tool changer door.

This probe is able to control

- The tool length 210 mm maxi
- The tool diameter 160 mm maxi
- The detection of a broken tool
- Measure repeatability : 0.5 µm
- Measure accuracy : 0.75 µm

Supplied with BLUM standard macros

Fives will add air blowing function closed to the Blum for tool cleaning

6.7 Part probing system and functions

The machine can be equipped with a Renishaw RMP60 measurement probe (radio transmission) that enables to measure the part or check the machine settings using adapted functions integrated into the CNC.

It is used for example in the following cases:

- Balancing raw material (Part program correction).
  In some cases, we use probe before machining to balance the part program in Y-and Z-axis.
- X-indexing
  Depending on the strategy used and requested accuracy, we may select a process called X-indexing to adjust Part origin into Machine origin.

  This process can also be used to adjust the deformation due to stress of the part during machining along X-axis.
- Section measuring
  Probe can finally also be used to check thicknesses and spacings.

A set of adapted cycles (functions) integrated into the CNC are able to perform automatically the following operations:

- Bore center finding
- Bore tolerance
- Auto-edge finding
- Edge-to-bore center distance
- Edge-to-edge distance
- Calibration cycle using a test ring or like artifact
- Surface probing

Supplied with one stylus + 1 spare

6.8 Post-Processor

The post-processor converts **APT** files generated by the **CAM** software into **ISO** programs that can be executed by the machine control.

The post-processor will be installed “ready to use” on one PC supplied by Customer.

A post-processor documentation (with all operating routines description) will be supplied to the Customer’s programming staff.

Programming instructions and post processing test will be jointly operated during programming training to guarantee the best performances when production starts.

Minimum Configuration required for PC:

- Operating system: Windows 7 or more; 64 bit
- Processor: Intel core I5 or more
- Memory: 1 GB DDRAM or more

6.9 CAD Solid model for Simulation software

FIVES will provide a 3D solid model (STEP format or other if required) of external shape of the MGP to integrate in simulation software including Spindle, Bed, 4 chucks, ATC, ….)

Simulation software is not included.

Simulation software can be used for bar movement and tool trajectory simulation only. Collision simulation is not integrated.

6.10 One set of standard jaws

The machine can be equipped with a set of standard jaws, able to clamp L, T, H or Z shape extrusions.

6.11 Special tools for maintenance

Fives machining will supply the following equipment for maintenance operations:

Designation	Qty	Picture
Tooling for geometry check of the chucks	1	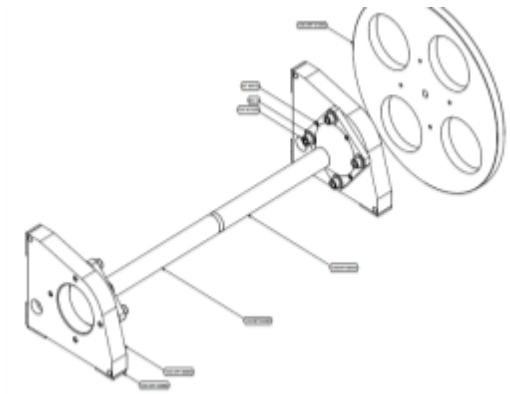
Tooling for spindle changing	1	Special plates for handling
Blank HSK63 Tool-holder for ATC set-up	1	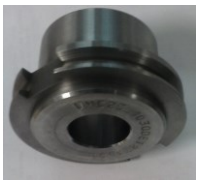

7 SAFETY AND PROTECTION

7.1 Supply conformity assurance

The machine is in compliance with the EC Directive 2006/42/CE, the national implementing legislation, and with the 2004/108/CE EMC standard

The machine is designed to ensure its function, and respect health and safety rules when use under normal conditions specified by the manufacturer.

The machine is equipped with emergency stops.

A CE certificate will be provided

7.2 Protection of the working area (Operator and general protection)

The working area is totally enclosed with interlocked protection, and broad glazing for easy monitoring of the machining operation.

The start of an automatic cycle is only possible if the doors are closed.

Axis movement with open doors is authorized only in manual mode and at limited speed.

7.3 Noise level at operator station

The guaranteed noise level (at 24 000 rpm, dry-run) does not exceed 80 dB.

The measures will be made at the operator station with closed doors and at different locations all around the machine at a one meter distance (max. 10 measuring locations).

7.4 Protection of the equipment

The machine power will be shut down immediately in case of first level alarm:

- Emergency stop button action
- Exceeding of extreme over travel limit (all axes)
- Overloading, over speeding, over temperature of axes or spindle motors

The design of the MGP300 makes collision of the spindle and the chucks impossible as long as the jaws conform to the allowable envelope.

The NC control makes collision between chucks V1-V2 and V3-V4 impossible in both the manual and automatic mode.

7.5 Troubleshooting

A program of detectable faults has been established and saved in the PLC.

Whenever a fault occurs, the error message(s) are displayed in clear text on the operator screen, indicating failure type and information.

8 ELECTRIC, HYDRAULIC, PNEUMATIC EQUIPMENTS & PAINTING

ELECTRICAL COMPONENTS	
Electrical cabinets	Dustproof and waterproof – IP54. It is equipped with an air-conditioning system enabling no air exchanges between inside and outside, only heat exchanges. One 210V socket
Electrical standard	According to European standard EN 60204
Power electricity supply	400 V, 50 Hz (Earth-neutral network - TN service)
Installed power	Approx. 120 kVA (to be confirmed) The customer is responsible to bring power to the electrical cabinet as described in commercial drawing joined.
PNEUMATIC & HYDRAULIC COMPONENTS	
Air flow	The customer will provide a compressed air line to support the air pressure requirements: Approx. : 2860 Nl/min. (at 20ºC) and 6 bars (Class 4 as per ISO/DIS 8573.1) Alarm is set when air pressure below 5 bars.
Air treatment	In order to ensure a clean compressed air supply, the following filters are included : • water separating filter with filter cartridge • pre-filter to capture dirt particles • fine filters are installed 5 µm for general supply and 0.5µm for measuring scale spindle lubrication and taper cleaning.

Fives Machining will install metal plates with lubrication schemes and recommended model and type of liquids.

FLUIDS

First fill of fluids in Customer site will be supplied by Fives Machining **(except coolant fluid)**.

Item	Fluid Type	Quantity
Hydraulic unit	ISO HM32 (Mobil DTE Excel 46 or equivalent – see maintenance manual)	20 L
Spindle lubrication	ISO VG32 (Mobil DTE24 or equivalent – see maintenance manual)	3 x 5 L
Grease (for roller bearings)	ISO G150 (MOBIL Vactra2 or equivalent – see maintenance manual)	20 kg
Cooling fluid	RENAULT Glaceol RX type D	100 L

PAINTING

"TEXTURED" PAINTING **as per FIVES standard**	
White	AFNOR 2640
Blue	RAL 5012
Grey	RAL 7012

9 PRE-ACCEPTANCE & TRAINING IN SELLER'S FACTORY

9.1 Pre-acceptance Schedule & Charges

The standard pre-acceptance is estimated to one week.

One representative from the Buyer must be entitled to sign the acceptance report prior to shipping.

It includes:

- Equipement check
- Validation of the geometry and metrology checks, validation of measured readings made by Fives Machining in the pre acceptance report
- Check of the functions
- Milling tests

After the validation of those items, the buyer and the seller will sign the pre acceptance report.

If the Buyer does not attend the tests, they are considered as being completed 8 days from the date which is set for the beginning of the tests.

The customer shall bear the associated costs for its own staff as and not limited to:
Transportation to Capdenac (France), daily accommodation and meals (breakfast, lunch and dinner), personal expenses.

The pre-acceptance will be held in English language.

Translation in another language is not included.

9.2 Pre-acceptance performance

As per FIVES MACHINING's standard document (see attached acceptance book)

MGP300 Machine	
Check of the supply	Yes
Geometry checks (ISO230-1)	Validation of the readings found by FIVES MACHINING according to the acceptance book
Safety test	Yes
Dry run	Yes – 8hours
Machining of accuracy test part	MGP300 standard test part Material and tools supplied by FIVES MACHINING

The above terms is successfully completed, the buyer and seller should sign a pre-acceptance report.

After pre-acceptance is signed, then the machine can be shipped.

9.3 Training for operator and maintenance (one week)

Before machine being shipped, one delegation composed of Customer's Operator and Maintenance trainees will come for a one week long training at Capdenac.

This training will be a preliminary before the training scheduled during Start-Up & Production support at Customer's site.

Program as follows:

PROGRAM	DURATION	MAX # OF TRAINEES	LOCATION	REMARKS
Operator training	3 days	3 - 4	Forest-Liné Capdenac factory (France)	
Maintenance training	2 days			

10 INSTALLATION, COMMISSIONING, TRAINING & FINAL ACCEPTANCE ON BUYER'S SITE

10.1 Conditions for installation at the Buyer's workshop

The buyer shall finish groundwork and machines foundation, in advance 4 weeks before the machine is transported at the workshop. And their quality should meet technical parameter requirement.

The groundwork and machine foundation shall be designed and constructed by the buyer, according to the layout and foundation drawing supplied by the seller.

Also they should be calculated as per the soil feature and rating loading capacity.

Slab specification :

- Single block slab
- Admissible charge : 2t/m²
- Size : 200* 2600*10310 mm
- Max. flatness default:10 mm on 5 m

10.2 Foundations & civil works

The machine rests on the ground without expensive foundation or pit or embedding.

The machine has to be installed on a foundation block, the rigidity and stability of which will ensure geometrical and dimensional accuracies.

Load drawings	Fives Machining's charge
Installation drawings	Fives Machining's charge
Leveling jacks	Fives Machining's charge
Calculation of the foundation block	Customer's charge
Realization of the foundation block	Customer's charge
Access restrictions around the site (safety barriers & 'no entry' signs)	Customer's charge

10.3 Installation and Commissioning

When the machine is transported in the workshop, the buyer and the seller should open package wooden cases as well as check the machine together, and confirm if the machine is whole and good condition.

The Seller will send engineers for the installation and commissioning of the machine.

The international flight tickets, hotel and personal expenses for seller's engineers are borne by the Seller.

In addition the Buyer is to provide technical assistance at its own expense, particularly:

- To transport the units to the installation site, protect the installation site and the units from damage of all kinds and keep the installation site clean.
- To arrange access restrictions around the site (safety barriers and 'no entry' signs).

- To provide the necessary and qualified additional personnel (particularly metal workers, electricians, other additional workers) as many and as long as required for the installation.

- To provide the following equipment: lifting equipment to include cranes, slings, timber, packing blocks and lifting bars, machine lubricants and any other items specifically excluded from the Seller's scope of supply on our machine layout.

- To provide the necessary supplies (electrical power, compressed air and water) including the necessary connections.

- To provide suitable, burglar-proof recreation rooms (with heating, electric light, phone and fax-connection, washing and sanitary facilities) and first aid for the Seller's engineers.

The Buyer must ensure that all materials are available as and when required in order to ensure a timely completion of the installation.

10.4 Final acceptance at Buyer's facility

10.4.1 Schedule

The Buyer should make available to the Seller upon request and without delay qualified personnel to witness the final acceptance tests.

10.4.2 Standard Final acceptance performance

As per FIVES MACHINING's *standard document (see attached acceptance book)*

MGP300 Machine	
Check of the supply	Yes
Geometry checks (ISO230-1)	Validation of the readings found by FIVES MACHINING according to the acceptance book
Safety test	Yes
Dry run	Yes – 8hours
Machining of accuracy test part	MGP300 standard test part Material and tools supplied by the end user
Miscellaneous	Supply of documentation

The above terms is successfully completed, the buyer and seller should sign a final acceptance.

10.5 Assistance to Start Production (1 x 8 weeks)

Mandatory with 1st machine purchased

FIVES MACHINING will provide an extended technical support after final acceptance.

During this support, a Fives Machining technical expert will be on the user's site for a duration of 8 weeks (maximum 8 hours a day, 5 days a week).

The aim of this extended support is to complement the training in order to render the user entirely autonomous on the MGP technology.

The Fives Machining engineer will help End-user to select the most appropriate programming method and cutting tools for high speed machining of extrusion profiles.

This assistance will include higher level training and may include according Customer's need following items:

- Ramp up assistance
- Program optimization
- Jaw design

Minimum program as follow:

PROGRAM	DURATION	MAX # OF TRAINEES	LOCATION	REMARKS
Operator training	3 days	3	Customer's site	
Maintenance training	2 days	3		
Programming training including **Jaws definition & manufacturing**	5 days (one week)	2		***Advanced training:*** *Focused on Optimization* *Productivity increase* *Jaws fabrication*

11 DOCUMENTATION

One (1) paper copy and one copy on a digital support with the final documentation will be supplied at the machine shipment time, including the following:

- Machine operation instructions and maintenance manual
- List of error and warning messages
- Machine programming manual
- Certificate of origin of the machine
- Spare parts list
- Recommended parts changing period chart (lifetime)
- E-Stops (Emergency buttons) mapping
- Ghost saving procedure
- Assembly drawings, electric, pneumatic and hydraulic diagram
- Operation and maintenance instructions of main purchased parts
- SIEMENS documentation
- Back-up (Ghost - numerical support only)

One set of the following documents shall be supplied within 2 months after contract comes into force :

- Foundation drawings and load drawing
  - One in pdf format
  - One in CAD version
- General drawings (Layout) of the machine

The pdf files (concerning drawings) shall be issued in high definition allowing print in A0 format.

12 WARRANTY

12.1 Warranty

Once the final acceptance is signed, a 12-month warranty period for the machine (max. 15 months after shipment) comes into force.

The warranty covers only the machine default due to the quality of the machine (clearly identified design errors, defective delivered material, troubles resulting from manufacturing assembly and starting fail).

The spindle warranty consists of the builder's warranty that is for a period of 12 months or 4000 hours of use, the first of the two terms reached.

However, the warranty is excluded in the following cases:

- in case of normal wear of the machine,
- in case of damages due to negligence, lack of supervision or use or maintenance contrary to Seller's instruction,
- in case of damages due to misuse or operating and programming errors
- when the user uses parts from other origin,
- when the user makes itself, or has performed by a third party without the prior written authorization of the Seller, repairs or modifications of the machine
- in case of event of Force Majeure, provided that the Party invoking such case undertakes to inform the other Party of these events as soon as possible.
- Accidents or consequences due to misuse or operating and programming errors
- Consequences of inadequate personnel or insufficient training of customer's personnel.

During the warranty period, the end-user may require replacement or repair of the recognized defective parts.

The end-user undertakes during this period to give the Seller the time and the possibility to make any useful change or deliver parts or replacement equipment as it deems necessary and make available the staff to help it in this work.

Any replacements, repairs or modifications of parts during the warranty period shall not have the effect of extending the duration of the warranty of the Equipment.

The Seller shall never bear any costs incurred by the end-user, if prior to any execution, the Seller has not given its written agreement on the proposed works and their amount.

The warranty will be rightfully cancelled if the buyer does not fulfill his contractual duties regarding payments.

Call for warranty:

In the event of a failure of the Equipment requiring warranty service, the end-user or its representative must transmit a formal message (fax, email or letter) to the Seller or its service in the country if available, specifying:

- The type of failure involved,
- The hypothetical cause.
- Useful information regarding the status of the Equipment at the time of the failure.
- The actions those seem the Buyer or End-User would take

If call for warranty is called during warranty period, the repairing work is due by the Seller and the trouble shall be solved even the warranty period is passed.

A log book shall be sent every month to Fives Machining.

12.2 Remote diagnosis (eWon)

This function is proposed by FIVES Machining in order to supervise the machine installed at the customer's plant by means of the central maintenance unit located in Capdenac.

For this function we supply the industrial router to connect the CNC and PLC via Internet VPN to our central maintenance unit.

This installation requires a connection to customer’s LAN which you would have to provide.

The dialogue with our technicians based in our Capdenac Plant will be possible via this industrial router. This installation allows modifying the PLC program directly from Capdenac. It also allows the master PC to check the inputs/outputs, to modify machine parameters, to download new software and to operate the CNC.
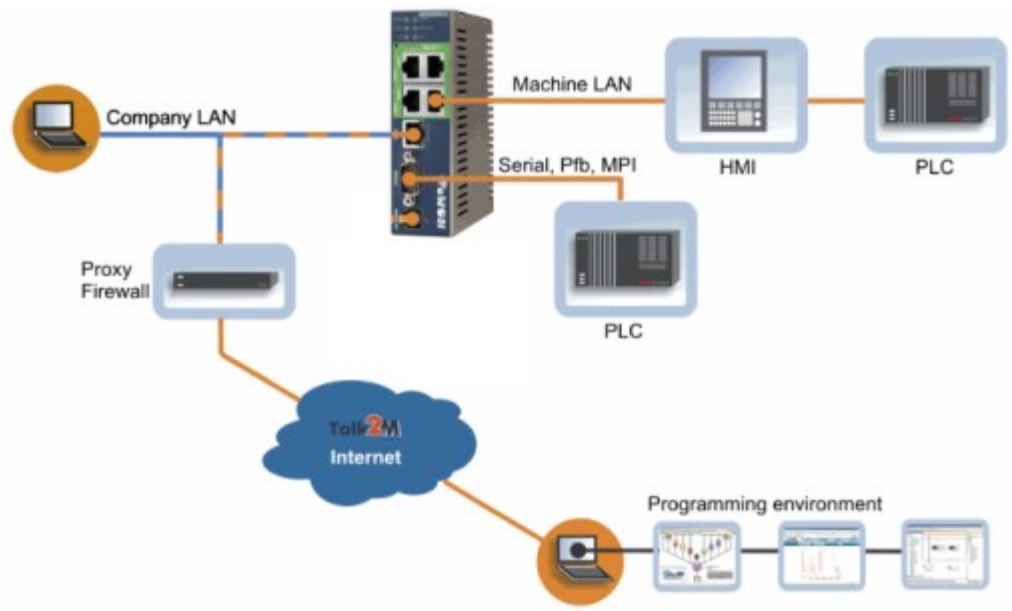
This service is accessible from Monday to Friday, from 8.00 to 17.00. It is free during warranty period and is subject to a subscription after.